NO.	DESCRIPTION	MATERIAL (MAKER)	Q'TY	WEIGHT	REMARK
001	GENERAL ASSY		1		

GENERAL TOLERANCE UNLESS NOTED

CASTING ±		C1	C2
LENGTH	<100	1.0	1.5
	~200	1.5	2.0
	~400	2.0	3.0
	~800	3.0	4.0
	~1600	4.0	5.0
	~3150	–	7.0
THICKNESS	<5	0.5	1.0
	~10	1.0	1.5
	~20	1.5	2.0
	~30	2.0	3.0
	~40	2.0	4.0

MACHINING ±	M1	M2	M3
3~6	.05	0.1	0.2
~30	0.1	0.2	0.5
~120	.15	0.3	0.8
~315	0.2	0.5	1.2
~1M	0.3	0.8	2.0
~2M	0.5	1.2	3.0
~4M	0.8	2.0	4.0
~8M	–	3.0	5.0
~12M	–	4.0	6.0
~16M	–	5.0	7.0
~20M	–	6.0	8.0

WELDING ±	W1	W2	W3
~120	1	2	3
~315	1	2	4
~1M	2	3	6
~2M	3	4	8
~4M	4	6	11
~8M	5	8	14
~12M	6	10	18
~16M	7	12	21
~20M	8	14	24

STANDARD FOR SURFACE ROUGHNESS

MARKS	Ra / Rmax
~	√ / –
▽	25 √ / 100S
▽▽	6.3 √ / 25S
▽▽▽	1.6 √ / 6.3S
▽▽▽▽	0.2 √ / 0.8S

THIS DRAWING CONTAINS CONFIDENTIAL PROPRIETARY INFORMATION. HENCE, THE PRODUCTION, TRANSFER AND/OR UTILIZATION IN WHOLE OR IN PART ARE PROHIBITED WITHOUT THE WRITTEN PERMISSION OF HYUNDAI ROBOTICS CO., LTD.

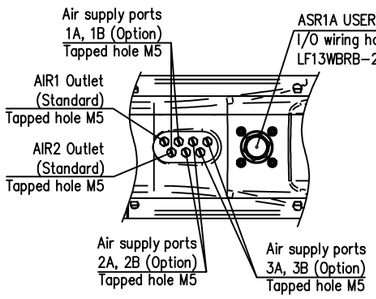

DETAIL "D"
(SCALE 2/1)

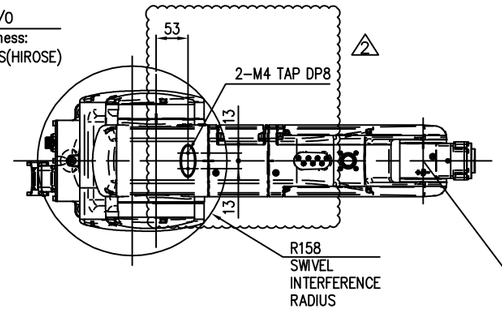

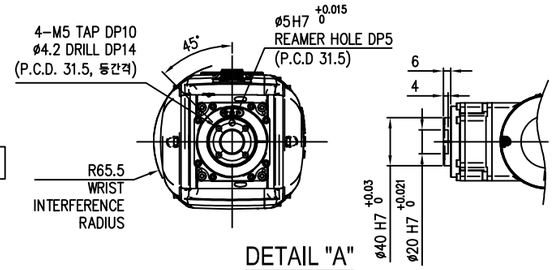

DETAIL "A"
(SCALE 2/1)

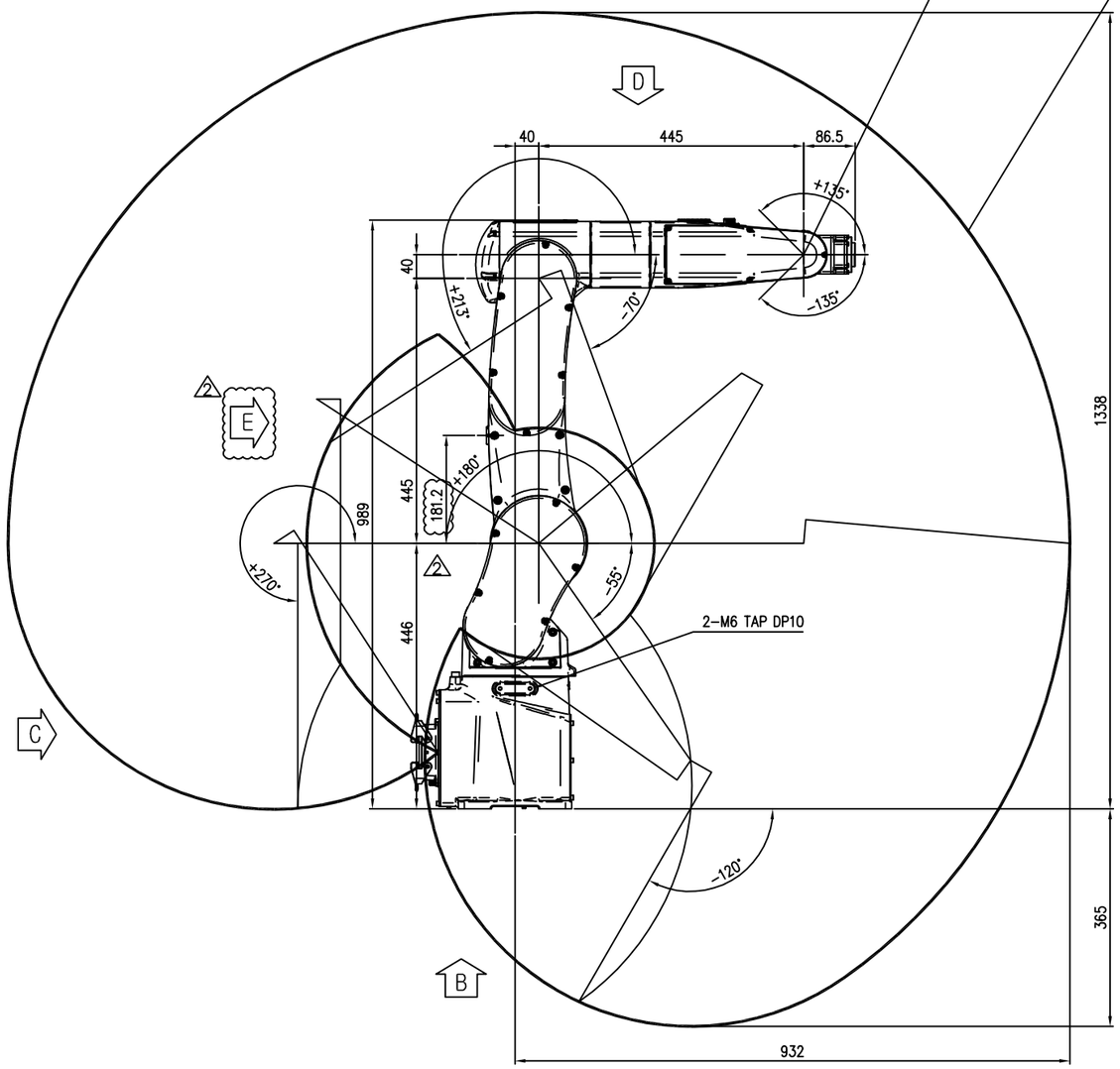

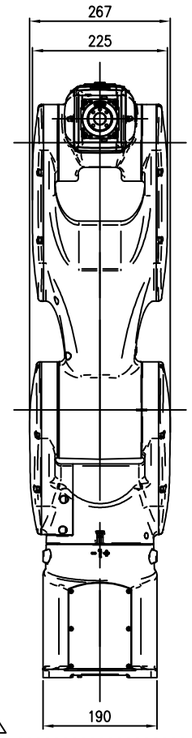

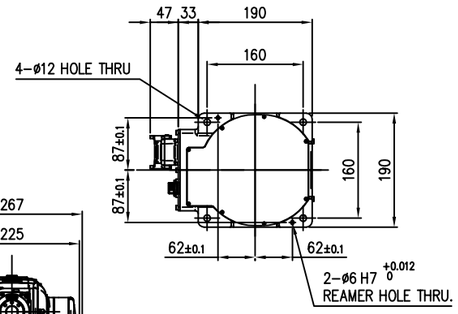

DETAIL "B"

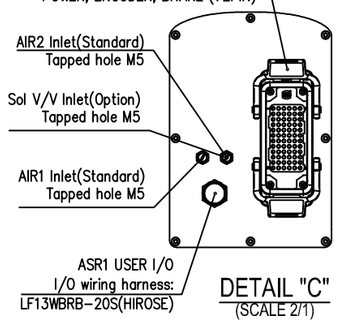

DETAIL "C"
(SCALE 2/1)

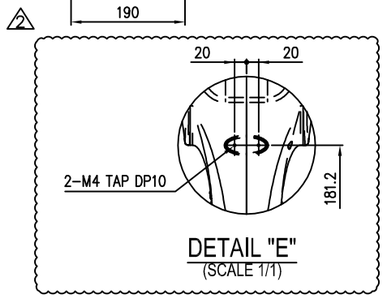

DETAIL "E"
(SCALE 1/1)

Specifications

Model / Item			기종명
Structure			Articulated
Drive System			AC Servo Motor
Degree Of Freedom			6
Maximum Operating Range	Arm	S (Swivel)	±2.967 rad (±170°)
		H (Horizontal)	+3.14 ~ −0.96 rad (+180° ~ −55°)
		V (Vertical)	+3.71 ~ −1.22 rad (+213° ~ −70°)
	Wrist	R2 (Rotating 2)	±3.316 rad (±190°)
		B (Bending)	±2.356 rad (±135°)
		R1 (Rotating 1)	±6.283 rad (±360°)
Maximum Operating Speed	Arm	S (Swivel)	6.544 rad / s (375° / s)
		H (Horizontal)	5.497 rad / s (315° / s)
		V (Vertical)	7.155 rad / s (410° / s)
	Wrist	R2 (Rotating 2)	9.599 rad / s (550° / s)
		B (Bending)	9.599 rad / s (550° / s)
		R1 (Rotating 1)	17.453 rad / s (1000° / s)
Wrist Torque		R2 (Rotating 2)	17 N.m (1.73 Kgf.m)
		B (Bending)	17 N.m (1.73 Kgf.m)
		R1 (Rotating 1)	10 N.m (1.02 Kgf.m)
Repeatability			± 0.03 mm
Temperature			0 ~ 40 ℃ (273 ~ 313 K)
Weight			42kg
transversal area			1.98m²

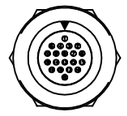

USER IO PIN MAP

ASR1 / ASR1A User IO Wiring Harness

Pin No.	Description	Pin No.	Description	Option
1	1 (User IO)	11	11 (User IO)	
2	2 (User IO)	12	12 (User IO)	1A(sol v/v)
3	3 (User IO)	13	13 (User IO)	1B(sol v/v)
4	4 (User IO)	14	14 (User IO)	2A(sol v/v)
5	5 (User IO)	15	15 (User IO)	2B(sol v/v)
6	6 (User IO)	16	16 (User IO)	3A(sol v/v)
7	7 (User IO)	17	17 (User IO)	3B(sol v/v)
8	8 (User IO)	18	18 (User IO)	G(sol v/v)
9	9 (User IO)	19	–	
10	10 (User IO)	20	–	

DWN	DSND	CHKD	CHKD	APPD	REASON FOR MODIFICATION	Q'TY	NO.
							3
	G.J.Park 2019.07.25	G.J.Park 2019.07.25	E.I.Jung 2019.07.25	S.W. Han 2019.07.25	서비스탭 위치 추가	2	2
	S.M. Ha 2019.07.09	S.M. Ha 2019.07.09	E.I.Jung 2019.07.09	D.K.Yun 2019.07.10	다이캐스팅변경으로인한3D수정	1	1
	G.J.Park 2018.12.28	G.J.Park 2018.12.28	E.I.Jung 2018.12.28	D.K.Yun 2018.12.28	First Issue		0

SCALE 1/1	PROJECT	1 SET	CC A
UNIT NO. 7000	TITLE GENERAL ASSY	DWG NO. R71-013556-2.2	Sheet 1/1
INFO NO. 70-00-0001			
PAINTING INNER COLOR OIL PROOF / OUTER COLOR OIL PROOF	W/O NO.	HYUNDAI ROBOTICS	

CC : Confidential Code

A1 (840x594mm)